# University Of Education

BS-IT 7th Semester (Evening)
Session (2019-2023)

## Final Year Project Proposal


**Team Mates**
Muzamal Hussain (bsf1900069)
Muhammad Sufyan (bsf1900133)
Ali Awais Mughal (bsf1900410)

**Submitted To**
Suhail Ashfaq Butt

# Table Of Content

**Project Title** ..... 2
**Project Overview Statement** ..... 2
**Project Goals & Objectives** ..... 3
**Goal:** ..... 3
**Objectives:** ..... 3
**High-level system components** ..... 3
**Application Architecture** ..... 4
**Gantt chart:** ..... 4
**Hardware and Software Specification:** ..... 5
**Optional Functional Units:** ..... 5
**Excluded:** ..... 5
**Tools and technologies used with reasoning:** ..... 5

# Table Of Figures

Figure 1: Artitecture diagram ..... 4
Figure 2: Gantt chart ..... 4

# Project Title

VISIOM WAND

# Project Overview Statement

**Project Title:** VISIOM WAND

**Group Leader:** Muzammil Hussain (BSF1900069)

**Project Members**

| Name | Registration | Email Address | Signature |
|---|---|---|---|
| Muzamal Hussain | BSF1900069 | mrmuzammil0001@gmail.com | |
| Muhammad Sufyan | BSF1900133 | msshtech@gmail.com | |
| Ali Awais Mughal | BSF1900410 | bsf1900410@ue.edu.pk | |

**Project Goal:**
Make a smart stick for blinds that will help them to detect static hurdles, detect water, and create an emergency communication system with the caretakers of blind. The device will help blinds to navigate in the environment safely.

**Project Objectives:**

- The visually impaired person can detect static hurdles and water.
- Built up an emergency communication system.
- Rechargeable device
- Easy to carry and easy to use.
- Lightweight with a reasonable price.

**Project Success Criteria**

- Goals and Objectives are clearly defined.
- Light Weight and Cost Effective
- Flexible

**Assumptions, Risks, and Obstacles:**

- Investment

**Type of project:**

- IoT based

**Target End users:**

- Visually impaired persons

**Development Technology:**

- Embedded C

**Platform:**

- Physical Device

**Suggested Project Supervisor:** Ms. Faiza Tariq

**Approved By:** Ms. Faiza Tariq

**Date:** Thu, 22 Dec

# Project Goals & Objectives

### Goal:

Make a smart stick for blinds that will help them to detect static hurdles, detect water, and create an emergency communication system with the caretakers of blind. The device will help blinds to navigate in the environment safely.

### Objectives:

- The visually impaired person can detect static hurdles and water.
- Built up an emergency communication system.
- Rechargeable device
- Easy to carry and easy to use.
- Lightweight with a reasonable price.

# High-level system components

- ESP32
- Ultrasonic Sensor with a scroller
- Water detection sensor
- Accelerometer and GPS Detector
- Push buttons to send email
- Buzzer
- Rechargeable battery
- Backboard
- On-off button.
- Wires for connections
- Technology (Embedded C) for integration of hardware and software

# Application Architecture

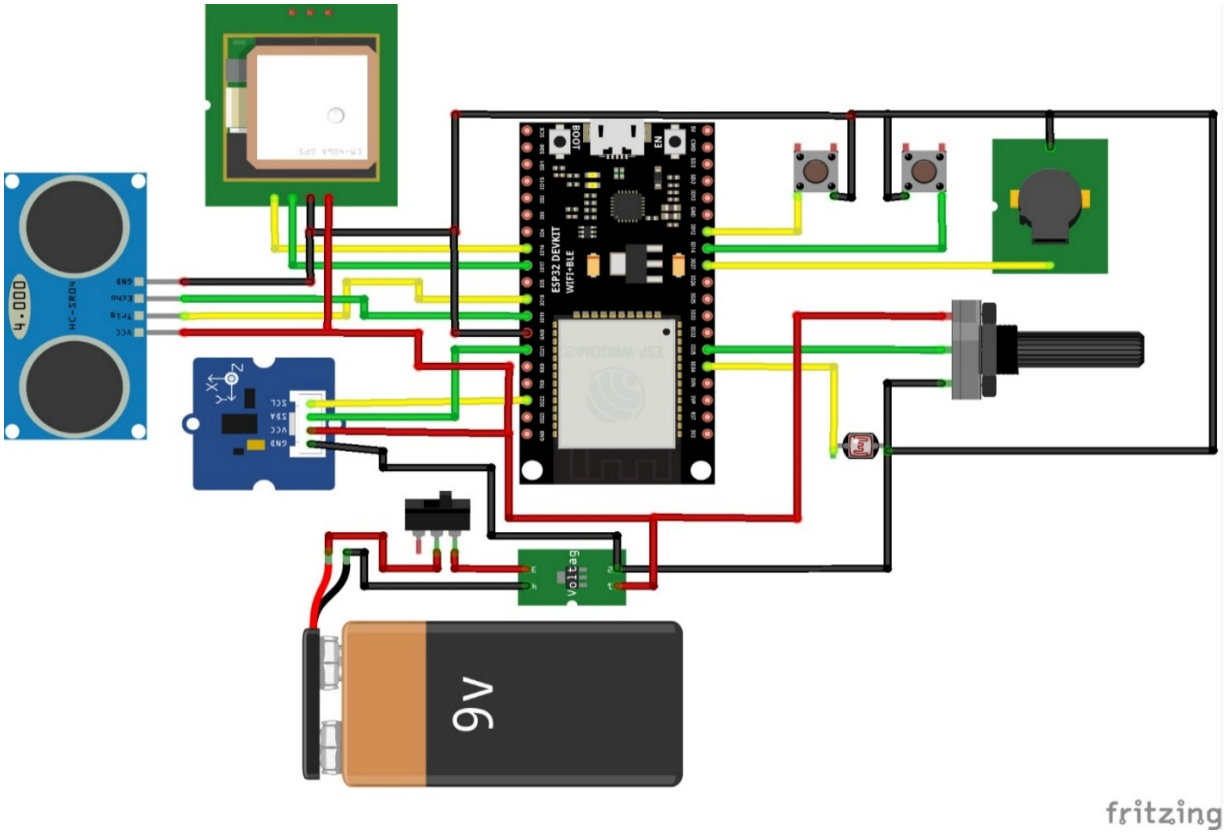


*Figure 1: Artitecture diagram*

# Gantt chart:

| ID | Activites | Duration | Dec-22 | Jan-23 | Feb-23 | Mar-23 | Apr-23 | May-23 |
|---|---|---|---|---|---|---|---|---|
| 1 | Mechnical Work | 10 Weeks | 22th Dec - 28th Feb | | | | | |
| 2 | Program Machine | 7 Weeks | | | | 1st Mar - 15th Apr | | |
| 3 | Implementation | 4 Weeks | | | | | | 16th Apr - 14th May |
| 4 | Testing | | | | | | | |

*Figure 2: Gantt chart*

## Hardware and Software Specification:

It's a standalone physical device.

## Optional Functional Units:

Flexible and can be attached with

- Stick

## Excluded:

- It's a device currently used for static hurdles in the future we'll work for moving objects.
- GPS will navigate outdoor; we are supposed to work for indoor in future.
- Alert message if the battery is running out.
- In the future, we will design a more suitable casing for components.

## Tools and technologies used with reasoning:

- ESP32 microcontroller is a main part by which whole components will integrate.
- Ultrasonic Sensors are used to detect hurdles.
- Water detection sensor is used for detecting water like puddles.
- Accelerometer to detect device state and GPS for detection of current(outdoor) location.
- A buzzer will be used to inform user about hurdles.
- A rechargeable battery would be attached for reuse.
- Arduino IDE is used for programming the device.